YOUR PJ LIBRARY GUIDE FOR SIGD

Every Jewish holiday tells a story. Sigd tells a story of hope, renewal, and connection.

Celebrated for centuries by Ethiopian Jews, Sigd takes place on the 29th of Cheshvan, 50 days after Yom Kippur. It is a day for reflection, gratitude, and renewing the community's covenant with God and commitment to Jewish life.

Traditionally, Ethiopian Jewish communities would gather on a mountaintop, dressed in white and led by the Kessim (Ethiopian Jewish spiritual leaders). Carrying Torah scrolls in a beautiful procession, they would pray, read from the Torah, reflect on the past year, and express their longing for Jerusalem.

After a day of prayer and fasting, families and friends would gather to break the fast and celebrate together.

Today, Sigd is celebrated in Israel and by Ethiopian Jewish communities around the world. Though the ways of celebrating may differ, the holiday remains a meaningful expression of Ethiopian Jewish identity, faith, and belonging.

PJ Library | Jewish Federation OF BRITISH COLUMBIA

A JEWISH STORY ROOTED IN ETHIOPIA

For centuries, the Beta Israel community lived and practiced Judaism in Ethiopia, preserving its traditions largely through oral transmission. Because so much of its history was passed down from generation to generation, we do not know exactly when or how the first Jewish communities arrived in Ethiopia. Several traditions and historical theories offer possible explanations, including connections to the Tribe of Dan, ancient migrations from Egypt or Yemen, and the Ethiopian tradition linking the community to King Solomon and the Queen of Sheba.

What we do know is that Ethiopian Jews developed a rich Jewish life of their own. Their traditions grew within the landscape and culture of Ethiopia while maintaining a deep connection to Torah, Jewish practice, community, and Jerusalem.

THE STORY BEHIND SIGD

Sigd draws inspiration from the biblical accounts of Ezra and Nehemiah, when the Jewish people gathered after returning from exile, listened to the Torah, and renewed their covenant with God. For Ethiopian Jews, this story became a living tradition: a yearly opportunity to strengthen their relationship with God, their community, and the Jewish people.

The mountain held special meaning, evoking both Mount Sinai, where the Jewish people received the Torah, and Jerusalem, the spiritual heart of Jewish life. Through prayer, fasting, and gathering together, the community renewed its commitment to Jewish tradition and to future generations.

The longing for Jerusalem was woven into Ethiopian Jewish prayers, songs, and communal life. For generations, Sigd gave this longing a place to be expressed and shared.

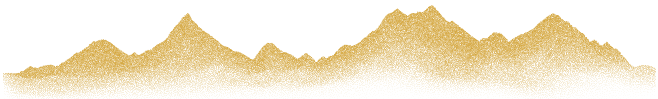

KEEPERS OF TRADITION

At the heart of Beta Israel life were the *qesoch*, (spiritual leaders who taught Torah), led prayers and ceremonies, guided communal life, and helped resolve disputes. The maloksewoch were associated with monastic spiritual life and Torah study.

The qesoch traditionally wore white garments during religious ceremonies. Their leadership reflects the many ways Jewish communities have developed their own practices of learning, praying, leading, and passing Jewish wisdom from one generation to the next.

A JOURNEY HOME

SIGD

LOOKING TOWARD JERUSALEM TOGETHER

Today, Sigd is celebrated in Israel and by Ethiopian Jewish communities around the world. Its message continues to inspire all Jews: no matter where our journey begins, we are strengthened when we gather together, learn from our traditions, and look toward a shared future with hope.

A JOURNEY OF FAITH, COMMUNITY, AND HOPE

Beginning in the 1970s and continuing through the 1990s and beyond, many Ethiopian Jews made their way to Israel through difficult journeys, refugee camps, and historic airlift operations. During the journey through Sudan, thousands faced hunger, illness, violence, and exhausting conditions. Many lost their lives before reaching Israel, while others waited months or years for the opportunity to continue their journey.

Operations such as Operation Moses in 1984–85 and Operation Solomon in 1991 brought thousands of Ethiopian Jews to Israel. These journeys reflected extraordinary determination within the community, alongside the efforts of Israeli, Jewish, and international organizations.

Today, approximately 177,600 Ethiopian Israelis live in Israel, according to figures from the end of 2024. Their story is not only one of migration, but of Jewish continuity: a community that maintained its faith, traditions, and connection to Jerusalem across generations and great distances.



A TRADITION RENEWED IN ISRAEL

For generations, Ethiopian Jews prayed for the opportunity to reach Jerusalem. Today, Sigd brings thousands together in the city their ancestors longed for.

The central Israeli gathering takes place at the Armon Hanatziv promenade, overlooking Jerusalem's Old City and the Temple Mount. The qesoch lead prayers and readings, carrying Torah scrolls beneath colourful ceremonial umbrellas. Many participants fast until the afternoon, when the fast is broken.

In 2008, Israel officially recognized Sigd as a national holiday, honouring Ethiopian Jewish heritage and creating opportunities for the wider Israeli public to learn about this tradition.

THE DIASPORA: A TRADITION THAT TRAVELS

As Ethiopian Jewish communities build their lives across the world, they continue to carry Sigd with them, keeping its traditions alive while finding ways to share them with new generations.

In diaspora communities, Sigd may be marked through communal gatherings, prayer, learning, music, traditional foods, and opportunities to explore Ethiopian Jewish history and culture. Some celebrations bring Ethiopian Jewish families together with the wider Jewish community, creating opportunities to listen, learn, and connect. The way Sigd is observed varies from place to place, shaped by the people and communities who gather.

Sigd has a particular meaning in Ethiopian Jewish history, rooted in the community's faith, identity, and longing for Jerusalem. It also offers the wider Jewish community an opportunity to learn from a tradition that has been nurtured and passed down across generations.

The Ethiopian Jewish community has gifted us a beautiful reminder: Jewish life has flourished in many places, and each community has helped carry our shared heritage forward in its own way.

WE DON`T HAVE TO CELEBRATE EVERY TRADITION IN THE SAME WAY TO LEARN FROM ONE ANOTHER. BY LISTENING TO ETHIOPIAN JEWISH STORIES AND MAKING SPACE FOR THEIR TRADITIONS, WE ENRICH OUR UNDERSTANDING OF THE MANY WAYS TO BELONG TO THE JEWISH PEOPLE.

BOOKS

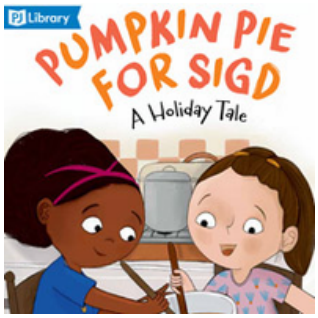



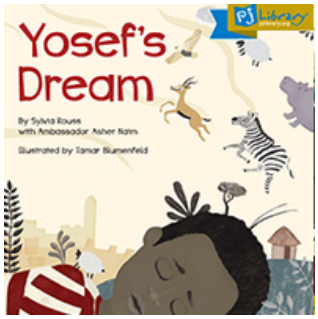

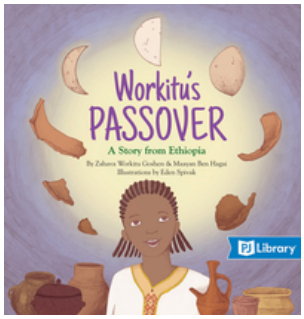

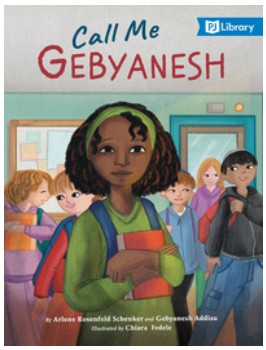

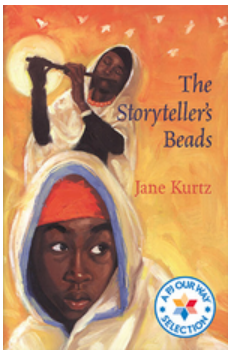



***please contact your pj library professional to order these books

ONLINE RESOURCES

East and West Music and Moshe Bar Yuda (recommended: first and last recordings) https://www.newethnicmusic.org/blank-19

The Ethiopian Jewry Heritage Center: https://ethiopianjhc.org.il/en/

Sigd celebrations in Israel https://www.youtube.com/watch?v=Qvy0Wb5m2z8

Salem, a song for Sigd
https://jewishdiversitystories.org/identity/amharic-song-for-sigd/

PJ Library SIGD Page https://pjlibrary.org/beyond-books/holidays-for-kids/sigd

Sigd Videos https://globaljews.org/sigd-videos-resource/

Timeline of the History of Beta Israel (Ethiopian Jewry)

1 The Kingdom of Beta Israel

14TH–17TH CENTURIES (APPROX.)

For several centuries, Beta Israel maintained an independent Jewish kingdom in the northern Ethiopian highlands, with its own leaders, military, and religious institutions. The kingdom was defeated in the early 17th century.



2 Preserving Jewish Identity and Renewing Contact with the Jewish World



- **16th century** — Rabbi David ben Solomon ibn Abi Zimra (the Radbaz) rules that the Jews of Ethiopia are descendants of the Jewish people.
- **1862–1863** — Abba Mahari's journey to Jerusalem. Many perished along the way, and the survivors returned.
- **1867–1868** — Joseph Halévy visits Beta Israel, establishing direct contact and introducing the community to the wider Jewish world.
- **1904–1908** — Jacques Faitlovitch strengthens ties through education, advocacy, and international support.
- **Early 20th century** — Tâmrat Emmanuel becomes a key leader, educator, diplomat, and advocate for Beta Israel.
- **Early 20th century** — Jewish schools are established in Ethiopia, introducing Hebrew, Jewish studies, and modern education.

3 The Road to Israel



- **1955** — The Kesim's Letter. Spiritual leaders of Beta Israel send a formal appeal to the State of Israel, requesting assistance in bringing Ethiopian Jews to their ancestral homeland.
- **Late 1950s–early 1960s** — The first Ethiopian Jew arrives independently in Israel but is initially classified as an illegal immigrant, highlighting the lack of official recognition at the time.
- **1973** — Rabbi Ovadia Yosef rules that Beta Israel are Jews according to Jewish law.
- **1975** — The Israeli government applies the Law of Return to Ethiopian Jews, officially recognizing their right to immigrate to Israel.

4 The Aliyah (Immigration to Israel)



- **Late 1970s–1984** — Thousands make the dangerous journey on foot through Sudan. Approximately 4,000 die from disease and the hardships of the journey.
- **1981–1984** — Operation Brothers, a secret Mossad mission, rescues Ethiopian Jews from Sudan using covert routes, including a temporary resort on the Red Sea coast.
- **1984** — Operation Moses brings approximately 8,000 Ethiopian Jews to Israel.
- **1991** — Operation Solomon airlifts more than 14,000 Ethiopian Jews to Israel in less than 36 hours during the collapse of Ethiopia's government.

5 Beta Israel in the State of Israel

- **2008** — The Sigd holiday is officially recognized by the Knesset as a national holiday in Israel.
- **2018** — Israel establishes a National Memorial Day (observed on 28 Iyar) to commemorate the approximately 4,000 Ethiopian Jews who perished on their journey to Israel through Sudan.
- **2000s–present** — Additional government decisions enable continued immigration of the remaining members of the Ethiopian Jewish community and support family reunification.



Krar

An Ethiopian Lyre

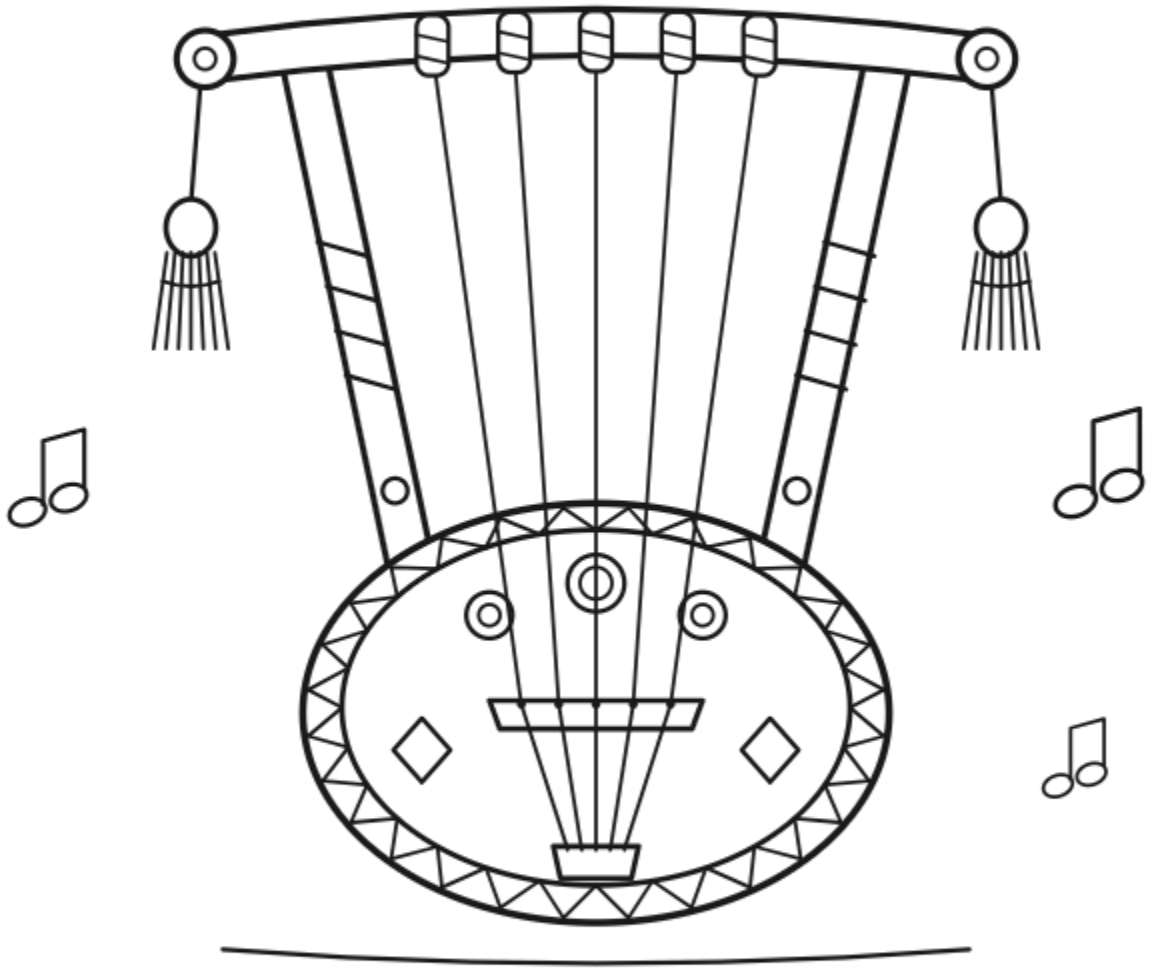

The krar is a lyre with five or six strings. People pluck or strum it while they sing, and it is loved all over Ethiopia.

Kebero

An Ethiopian Drum

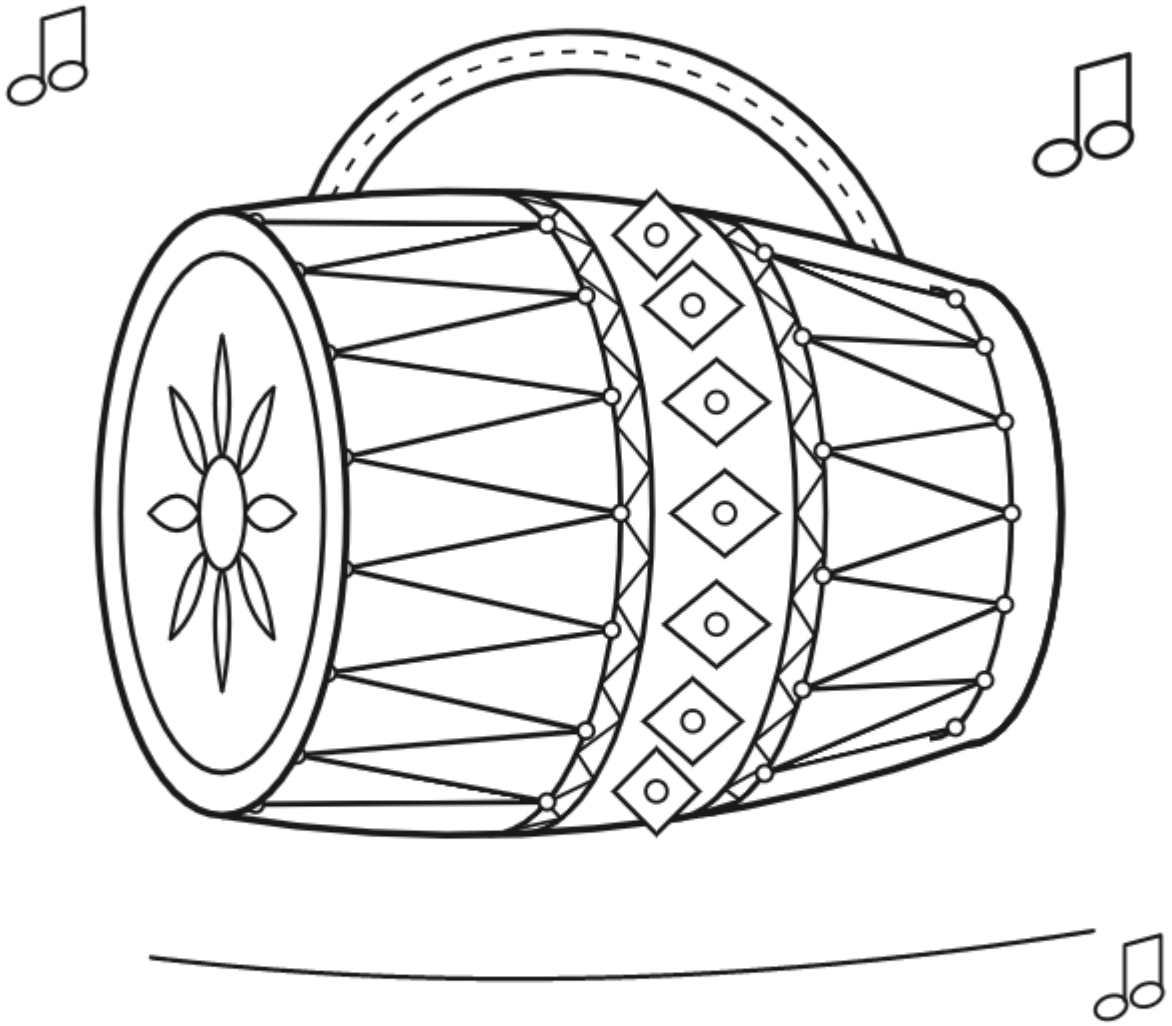

The kebero is a big drum with two heads, played with the hands. Its beat fills the air at church celebrations and festivals across Ethiopia.



DIY MUSIC MAKER

Make a Coffee Can Drum!

Turn an empty can and some scrap paper into a colourful drum you can play anywhere.



What you'll need

- **Crayons, markers or paint**
- **Paper** — recycled pages from damaged books work great!
- **Scissors**
- **Coffee can**
- **Glue**

Let's make it!

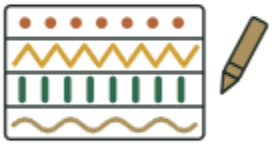

1. **Draw horizontal lines** across your paper. Decorate each section with a different colourful pattern using crayons, markers or paint.

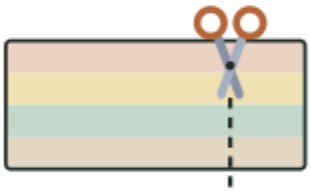

2. **Cut the paper** with scissors so it fits all the way around the sides of the can.



3. **Glue the paper** to the sides of the can. Smooth it down and let it dry.



4. **Start drumming!** Use your hands to tap out a beat. Try fast, slow, loud and soft.

Grown-ups: help with the scissors, and check the can's rim for sharp edges before decorating.

Drum tip: tap the middle of the lid for a deep BOOM, and near the edge for a lighter tap.

RAINY DAY CRAFT

Make a Paper Plate Umbrella!



Turn a plain paper plate into a bright umbrella, then paint it any way you like.

What you'll need

- Paper plates
- Scissors
- Glue
- Black or coloured cardstock
- Paint
- Paintbrushes

Let's make it!



1. **Cut out the handle.** Draw an umbrella handle on black or coloured cardstock and cut it out.

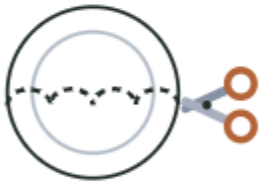

2. **Shape the plate.** Cut curved lines into the paper plate to turn it into an umbrella shape.



3. **Stick on the handle.** Glue the handle onto the back of the paper plate.



4. **Paint and design!** Flip it over and paint your umbrella however you wish.

Grown-ups: depending on their age, kids may be able to do the cutting themselves, but always supervise.

Design idea: try stripes, polka dots or raindrops, or paint each section a different colour.

DABO: ETHIOPIAN BREAD RECIPE

Ingredients

- 1 pack dry yeast
- 4 cup all-purpose flour
- ¼ cup sugar or honey
- 2 cup warm water
- 1 egg
- 2 tsp oil
- 1 tbsp salt

Directions:

1. In a small bowl, dissolve yeast in warm water. Put aside and let it sit for 30 minutes.
2. In a large bowl, mix all of the dry ingredients (flour, sugar, and salt).
3. Add yeast, oil, and egg to dry ingredients and mix.
4. Add water gradually to the mixture. Begin to knead the dough until it becomes soft and elastic.
5. Apply oil to your hands and make a sphere out of your dough.
6. Place dough into a large bowl and cover with a towel. Let rise for one hour.
7. Still in the bowl, continue to knead the dough to get rid of any excess air.
8. Transfer dough onto baking pan.
9. Let dough sit and rise for 20 minutes covered.
10. Heat oven to 250° F and let bake for 45 minutes or until golden brown.
11. Let Dabo cool down and enjoy!



PJ Library | Jewish Federation of British Columbia

Make Your Own Ethiopian Tukul with Quick Dry Clay

A tukul is a traditional Ethiopian house, often round and made with natural materials. Let's build one together!



Supplies

- Quick dry clay (air-dry works great!)
- A small container or lid (optional, for shaping)
- A bowl of water (to keep your clay smooth)
- Paints and paintbrushes (optional, to decorate)



Steps

1



Take a handful of clay and shape it into a ball. This will be the base of your tukul.

2



Gently press the clay into a round shape and hollow out the inside. You can use a small container or lid to help you shape it.

3



Add the roof! Shape a cone and place it on top of your base. Smooth the edges and blend the clay together.

4



Let your tukul dry completely, then paint and decorate it with traditional Ethiopian patterns (or your own creative designs!).

Get creative... and build your own little piece of Ethiopia!



PJ Library | Jewish Federation of British Columbia